THE INFORMATION CONTAINED IN THIS DRAWING IS THE SOLE PROPERTY OF <CAVALLERO PLASTICS INC. > ANY REPRODUCTION IN PART OR WHOLE WITHOUT THE WRITTEN PERMISSION OF < CAVALLERO PLASTICS INC.> IS PROHIBITED.

REVISIONS			
REV.	DESCRIPTION OF CHANGE, DWG LOCATION	DATE	APPROVED
---	ORIGINAL ISSUE	10/20/00	BDB
A	ADDED 8 LUGS .125 HIGH	9-03-08	BDB

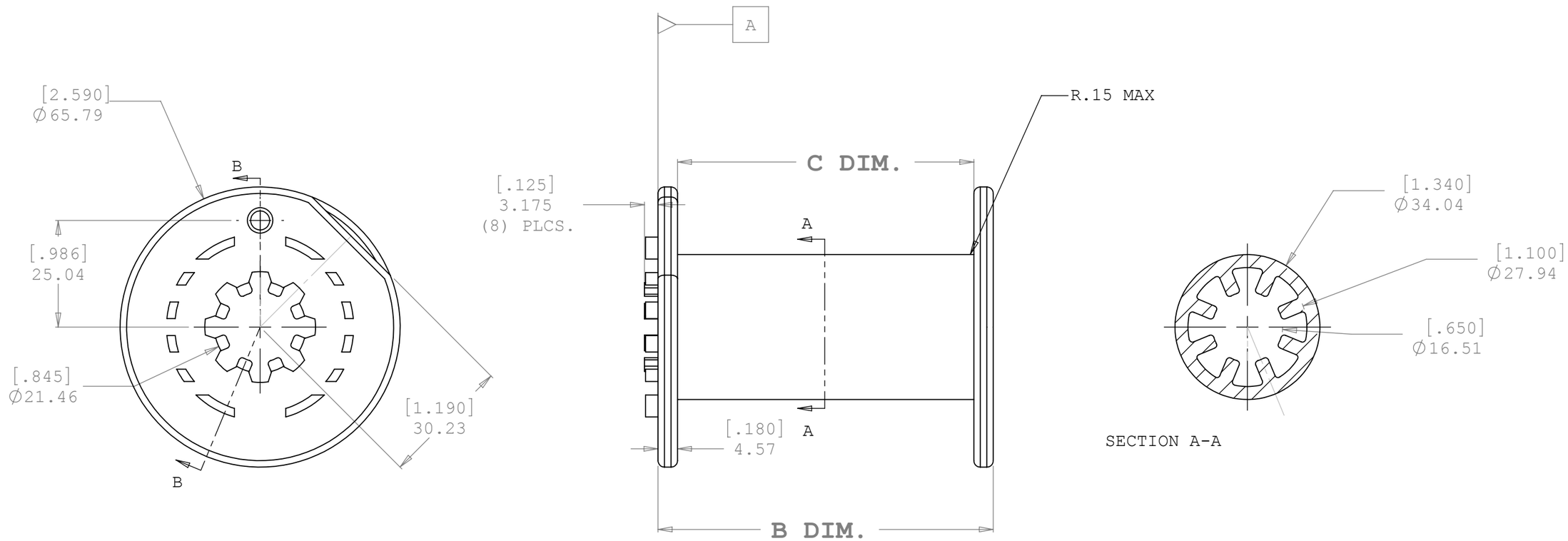

PT.#	A DIM	B DIM	C DIM
CRB-01		78.49[3.09]	68.58[2.70]
CRB-02		112.52[4.43]	103.63[4.08]

CAVALLERO PLASTICS INC.
1250 NORTH ST.
PITTSFIELD MA 01201
PHONE 413-443-0925
FAX 413-443-9586
E-MAIL SALES@CPLAS.COM

TOLERENCE UNLESS SPECIFIED OTHERWISE				PART NAME:
	.XXX	.XX	ANGLES	ROTARY BOBBIN
	±.005	±.015	±1°	
	MILLIMETERS			
	±.13	±.40		

PART# CRB-01& CRB-02		PART REV.A
MATERIAL: ACETAL		SHEET 1 OF 1
DRAWN BY:BDB	CHECKED BY:	APPROVED BY: